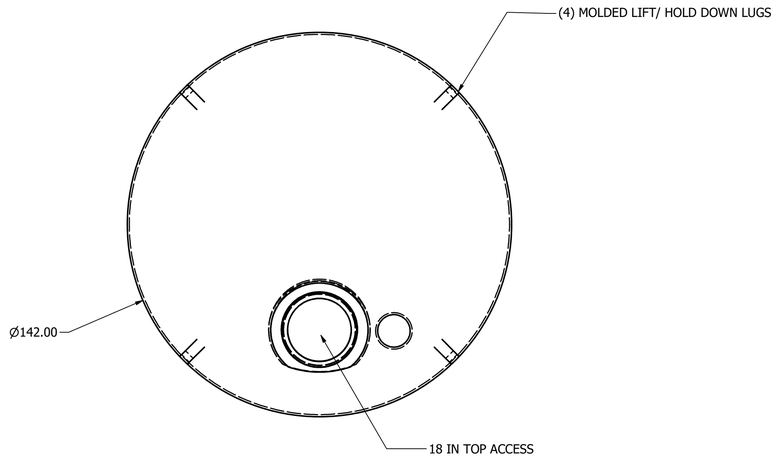

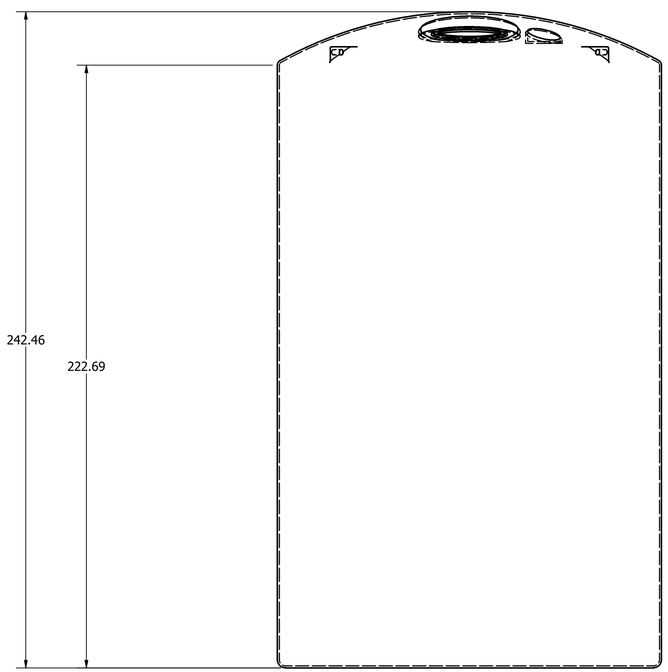

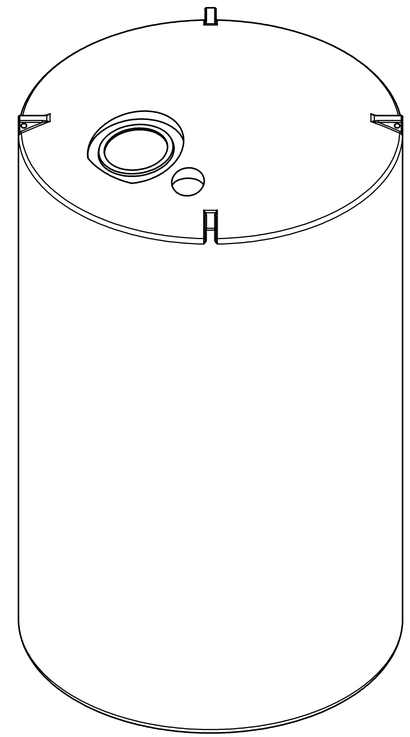

NOZZLE SCHEDULE					
TAG	QUAN	SIZE	DESCRIPTION	ORIENT	ELEV

GENERAL NOTES:

1. MATERAIL: PRIMARY CONTAINMENT TO BE HDLPE CONSTRUCTED PER ASTMD1998-06 FOR TYPE II TANKS AT 73˚F @ 1.4 S.G. USING 600 PSI HOOP DESIGN BASE.
2. COLOR: NATURAL (WHITE)
3. TEMP: 73˚DESIGN BASE
4. CONTENTS: BY CUSTOMER
5. ORIENT ALL FITTINGS FROM TOP VIEW
6. ATMOSPHERIC PRESSURE ONLY
7. TANK SHALL BE LOCATED OUTDOORS
8. ALL PIPING AND VALVES MUST BE INDEPENDENTLY SUPPORTED AND ALLOW FOR TANK EXPANSION & CONTRACTION OF 1.5% DIMENSIONAL MOVEMENT. FLEX CONNECTION MUST HAVE MIN DESIGN FOR 5˚ ANGULAR MOVEMENT, ALLOW FOR ELONGATION, COMPRESSION, AND AXIAL MOVEMENT.
9. TANK REQUIRES 100% BOTTOM SUPPORT
10. ALL WFN FLANGES REQUIRE 11 FT/LBS OF TORQUE TO SEAL. DO NOT OVER TIGHTEN FLANGES
11. ALL WFN FLANGED REQUIRE FULL FACED GASKETS
12. ALL DIMENSIONS ARE IN FT AND IN UNLESS OTHERWISE NOTED.
13. PROTECTOPLAS DOES NOT WARRANT FOR CHEMICAL ATTACK OR PRODUCT MISUSE. CHECK ALL MATERIAL COMPATIBILITY PRIOR TO USE.
14. LIFT ONLY FROM MOLDED LIFTING POINTS. DO NOT LIFT FROM ANY WELDMENTS

QUAN REQ. : (1)

THIS DRAWING, THE NAME "PROTECTOPLAS", IMAGES, DESIGNS, AND LOGO ARE PROPERTY OF EBCO INC. THEY MAY NOT BE ALTERED, COPIED, OR USED IN ANY WAY WITHOUT WRITTEN PERMISSION FROM EBCO INC SIGN BY COMPANY OFFICER.

DRAWN BY: zeberly	9/7/2021	CUSTOMER :
		TITLE :
QC		PROTECTOPLAS COMPANY 3500 CRANE CENTRE DR STREETSBORO, OH 44241
APPROVED BY		SIZE D / DWG NO / REV
		SCALE 1 / 28 / SHEET 1 OF 1